Available online at: www.journalacr.com

International Journal of Applied Sciences And Current Research

Volume 01, Issue 01, pp.17-21, February, 2016

RESEARCH ARTICLE

DESIGN AND IMPLEMENTATION OF ELECTRICAL POWER SYSTEM FOR ISRA1 CUBE SATTELITE

[1]Moutaman Mirghani*, [1]Mohammed Bek Omar Elssadig and [2]Hind Mahmoud Elhaj

[1]Institute of Space Research and Aerospace (ISRA), Sudan

[2] Computer Engineering, Eng. Collage Al Neelain University, Sudan

ARTICLE INFO

Article History:

Received 16th February, 2016

Received in revised form

20th February, 2016

Accepted 21th February, 2016

Published online 28th February, 2016

Key words:

Cubesat,

1U,

Electrical Power System,

Solar Cell.

ABSTRACT

Cube satellites are miniaturized nanosatellites that are used as educational and scientific platforms. CubeSats are of about a liter size and launched to low Earth orbits of hundreds of kilometers altitude. The Electrical Power System (EPS) of a cube satellite is responsible for providing the adequate electric voltages and currents to the different subsystems onboard. The primary source of power is the Sunlight that energizes solar cells to generate electric current used to charge the onboard batteries. The main electrical power source for a satellite are the solar panels that collect the sunlight and transform it to electricity, which is stored in the onboard batteries. Because of the motion of the satellite along its orbit, the direction of the solar panels towards the Sun varies continuously and hence the voltage generated is varying accordingly. A critical factor that limits the useful lifetime of a satellite is the battery lifetime. For longer battery lifetime, the charging current should be precisely controlled. EPS is in charge to regulate the batteries charging currents as well as the diverse voltages required by all subsystems and protect them from over voltages and currents. A big challenge for EPS of a cube satellite is the limitation of the size and mass of the components used to implement it. Other challenges facing design of EPS for CubeSat is the limitation of power budget. In this paper, the design and implementation of the EPS of ISRASAT1 cube satellite will be highlighted, summarizing work done by the EPS research team and the satisfying results of 4.66 W total power that were achieved by this design and implementation.

Copyright © 2016 Moutaman. This is an open access article distributed under the Creative Commons Attribution License, which permits unrestricted use, distribution, and reproduction in any medium, provided the original work is properly cited.

Citation: Moutaman M., Mohammed B. O. E., and Hind M. E., 2016. "Design and implementation of electric power system for ISRA1 cube sattelite", *International Journal of Applied Sciences and Current Research, 1, (1), 17-21.*

1. INTRODUCTION

A CubeSat is a type of miniaturized satellite, nanosatellites in particular which are of 1 kg to 10 kg of mass. It is typically composed of 10x10x11.35 cm units; each of them is designed to provide 10 cm cube or 1 liter of useful volume and weights no more than 1.33 kg. The smallest standard size is 1U but it can be combined to make larger satellites incase bigger payloads are needed. In 1999, the CubeSat project began as collaborative effort between California Polytechnic University and Stanford University. The project aimed to provide standard for design of nanosatellites to increase accessibility to space and reduce cost and development time [1].

CubeSat provides the opportunity for scientific research, including Earth science, atmospheric science, space weather, etc. It is also used for educational purposes and in amateur radio service and Automatic Identification System (AIS) tracking. In order for a CubeSat to carry its mission, several subsystems are integrated internally. The basic subsystems are the communication system (COM), electrical power system (EPS), onboard computer (OBC), attitude determination and control system (ADCS), and the payload. The contents of the payload depend on the requirements of the mission. Each subsystem plays a crucial role in keeping the CubeSat fit and functioning properly. EPS is a distinctive subsystem and affects the whole task of the satellite. This paper focuses on electrical power subsystem design and implementation for ISRASAT1 cube satellite.

2.ISRASAT1 PROJECT

ISRASAT1 is a research project that runs at the Institute of Space Research and Aerospace (ISRA) in Sudan. This project aims to design and implement a prototype of a real CubeSat. It

***Corresponding Author:** Moutaman Mirghani, Tel.249-123933961*
Institute of Space Research and Aerospace (ISRA), Sudan

is designed to orbit in Low Earth Orbit (LEO) at about 450 km above the Earth.

The mission of ISRASAT1 is to take spatial images of the surface of the Earth. It sends a continuous beacon that contains data about the CubeSat, while transmitting telemetry data sensed by the onboard sensors, such as temperature, attitude information. The stored images are sent when it orbits above Khartoum city. As typical cube satellites, ISRASAT1 consists of five subsystems; EPS, OBC, COM, ADCS and a camera as payload. In addition to the satellite, a ground station is designed to receive images from the satellite as well as the telemetry data and the beacon.

3. ELECTRICAL POWER SYSTEM

The Electrical Power Subsystem (EPS) is an essential subsystem in cube satellite. Each subsystem requires a specific power in order to function. The power system provides each subsystem with the power it needs. It is also responsible of protecting subsystems form over currents that may occur during the satellite operation. EPS makes use of solar cells to convert Sunlight into electrical energy, and condition it to be suitable to be stored in batteries. Sunlight falling on solar cells provides power to batteries as well as subsystems. The power stored in batteries fill the gaps during non-direct Sunlight, and becomes fully utilized in eclipse, when earth covers the sun. For a solar cell, photons in Sunlight hit the solar panel and are absorbed by semi-conducting materials. Electrons which are negatively charged are knocked loose from their atoms as they are excited. Due to the special chemical composition of solar cells, the electrons are only allowed to move in a single direction. The open-circuit voltage is given according to the equation

$$V_{OC} = \frac{kT}{q} \ln\left(\frac{I_{SC}}{I_0} + 1\right) \qquad (1)$$

where,

I_{SC} = short-*circuit current* (amperes)
I_0 = reverse saturation current (amperes)
n = diode ideality factor (1 for an ideal diode)
q = elementary charge (1.602×10^{-19} coulombs)
k = Boltzmann's constant (joules per Kelvin)
T = absolute temperature (Kelvin)

At 25°C, kT/q ≈ 0.0259 V. It is not possible to extract any power from the device when operating at either open circuit or short circuit conditions. That is axiom because the power is the product of current and voltage. The power comes from solar cells charges the onboard batteries of the satellite. In order to save the lifetime of batteries, the charging current should be as stable as possible. The charging current is kept low to prevent rapid production of gases that can rupture the cell. The formula of charging time of a battery is

$$T_c = Q / I_c \qquad (2)$$

where Q in Ah is the charge and I_c is the charging current. Fully discharged cells recharge less successfully than only partly depleted cells, particularly if they have been stored in a discharged state. EPS has to manage the charging current as well as currents absorbed by other subsystems.

4. ISRASAT1 EPS POWER SPECIFICATIONS

Power budget is a very important factor, which shows the power consumed by Cubesat subsystems and whether the power supplied from EPS meets that power requirements. As mentioned earlier, the power produced by EPS is distributed to the onboard computer subsystem, communication subsystem, payload and attitude determination and control subsystem. Table 1 below shows power consumption for each subsystem in ISRATAT1.

Table 1: ISRASAT1 Subsystems Power Consumption Specifications

Subsystem	V, V	I, mA	P, W
OBC	5	214	1.07
ADCS	5	245	1.22
COM	3.3	568	1.87
Payload	5	100	0.5
Total Power	-	-	4.66

5. EPS STRUCTURE SPECIFICATIONS

EPS should meet ISRASAT1 CubeSat structure requirement since the size, volume, and weight are critical factors to consider when designing EPS. Structure specifications of ISRASAT1 are shown in Table 2 below.

Table 2: ISRASAT1 EPS Structure Specifications

Description	Measurement
EPS Layer Dimension	90.5x91 mm
Total Mass	140 g
Solar Cell Board Dimensions on Four sides	82x100 mm
Solar Cell Board Dimensions on Top and Bottom Sides	82x83 mm

6. EPS ARCHITECTURE

EPS consists of solar cells that collect Sunlight and convert it to electrical power. A step-up DC-DC converter (i.e. boost) is used to raise the input voltage from low voltage to high voltage, in order to provide the battery charger IC with sufficient voltage. In turn, that IC supplies voltage and current suitable to charge the battery by constant voltage and constant current, CV and CC respectively. Battery store power and supply Cubesat subsystems, while EPS is monitoring its function by measuring voltage, current, capacity of current and temperature and sent them to OBC. Step-down DC-DC converter (i.e. buck) causes voltage drop from high voltage to suitable voltage, depending on each subsystem requirements. Protection is applied to protect subsystems from over-currents and surges. A microcontroller is used to determine the maximum power point (MPP) from solar cell panel using data

from voltage and current sensors. The priority control block diagram ISRASAT1is shown in Fig. 1.

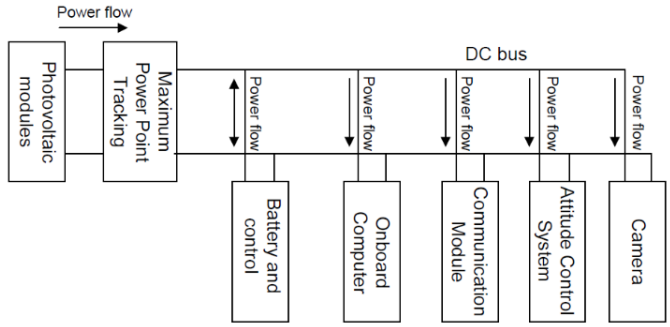

Fig.1. EPS Block Diagram

6.1. SOLAR CELL

A solar cell, or photovoltaic cell (PV), is an electrical device made of semiconductors and chemical materials that converts light energy into electrical energy by the photovoltaic effect. There are several different types of solar cells with different efficiencies. Gallium arsenide-based solar cells are typically favored over crystalline silicon in cube satellites, because they have a higher efficiency. The most efficient solar cells currently in production are multi-junction photovoltaic cells, which use a combination of several layers of both gallium arsenide and silicon to capture the largest spectrum of light possible. ISIS solar panels as shown in Fig. 2 are often used. The solar cells are from AZUR Space. They are triple-junction solar cells made of GaAS. The panel also contains Sun sensor and temperature sensor. It has an efficiency of 28% and generates power evaluated by 2.3 W and potential evaluated by 5 V for one side,. The number of panels used is five panels, four panel on the sides and one on top.

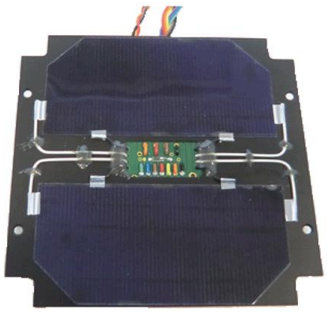

Fig.2. EPS ISIS CubeSat Solar Panels

Each panel consists of two cells and the dimension for each cell is 80*40 mm. For each, side the two cells are connected in series and in parallel with the other panels as shown in Fig. 3 below.

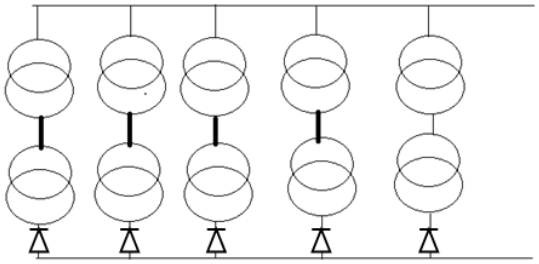

Fig.3. Solar Panels for the Five Sides

6.2. STEP UP CONVERTER

Step up converter is an important device that increases the voltage output from solar cell of 5 V up to 12 V that is used to charge the battery. It is normally an IC between the solar cell and battery charger used to increase the voltage to an adequate value that is suitable for batteries. The IC designated Max1771 is proposed to be used. It has efficiency of 90 %, and it can supply the load by current from 30 mA up to 2A. It uses pulse frequency modulation and combines benefits of pulse width modulation (PWM). It consumes current of about 110 µA, and shutdown current of 5µA. Additionally, it needs to connect with fewer external components and has range between 2V and 16.5 V on input. Otherwise, it can be modified to obtain output voltage from 12V via two resistors. It uses a switching frequency 300 kHz.

6.3. MAXIMUM POWER POINT TRACKING

Maximum point power tracking (MPPT) is an electronic system used to obtain the maximum power generated by photovoltaic cells. There are several MPPT techniques such as perturb and observe, incremental conductance, constant voltage, artificial neural network method, etc. Incremental Conductance (INC) technique is applied in ISRASAT1.

In the power-voltage curve of the photovoltaic cell characteristic, the power derivative is equal zero at MPP, less than zero on the right side of MPP and greater than zero on the right side.

$$\frac{dP}{dV} = 0, \quad P = IV \tag{3}$$

$$\frac{dP}{dV} = V\frac{dI}{dV} + I\frac{dV}{dV} = 0 \tag{4}$$

Thus

$$\frac{dI}{dV} = -\frac{I}{V} \tag{5}$$

where I/V is the conductance ratio [2].

INC calculates the instantaneous conductance (I/V) and compares it to the incremental conductance (dI/dV), according to the result it decides to increase, decrease or maintain the current voltage. Fig. 4 shows the INC flowchart.

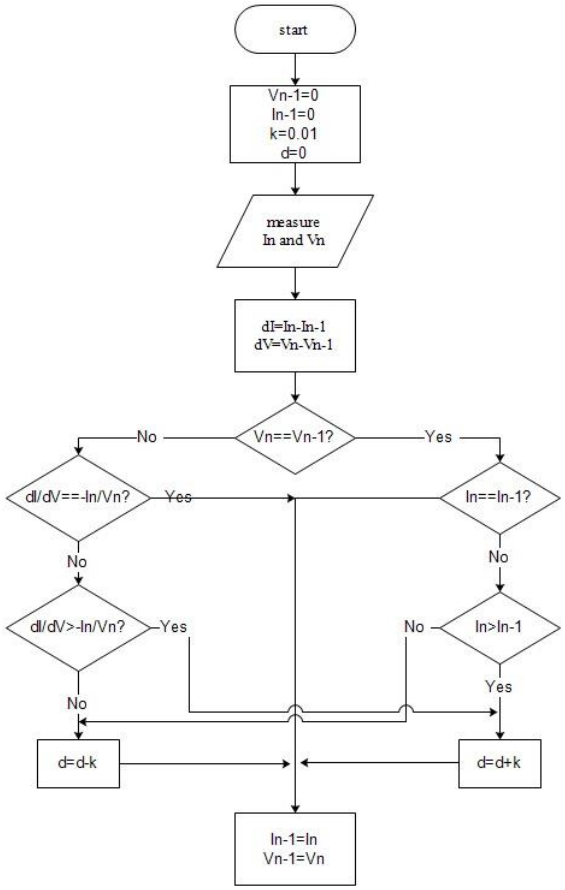

Fig.4. INC Flowchart

Current and voltage sensors, a microcontroller and a DC-DC converter are the main components for MPPT system. Depending on the photovoltaic cell voltage and current sensed via sensors, the MPPT technique determines the voltage where the photovoltaic cell is able to produce the maximum power available.

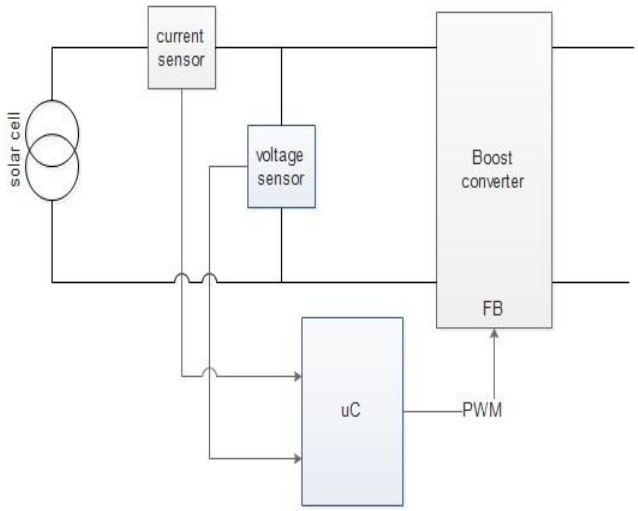

Fig.5. Block Diagram of MPPT Hardware

The microcontroller varies DC-DC converter output voltage to meet the determined voltage by regulating the duty cycle of a PWM signal. Low duty cycle decreases the output voltage of DC-DC converter and vice versa. Figure 5 shows the block diagram for MPPT hardware.

6.4. BATTERY CHARGER

We shall use IC ADP3810 gives us constant current and constant voltage and it has four output voltage option 4.2 V , 8.4V ,12.6V and 16.8 V the ADP3810 has internal IC thin film does on trim output voltage to supply the battery. it is located between step up converter and battery whereas input voltage 12 V from step up converter and output voltage from battery charger 8.4 V and it suitable voltage to batteries

6.5.BATTERIES

Battery work to store energy from solar cell during eclipse working to supply subsystem by power we used battery lithium ion and needed to four batteries. Whereas connect two batteries series and each pair connect parallel as shown in figure 6. Every battery can supply current by 1000 mA and the resultant 2000 mA where potential for each 3.7 V and sum of potential 7.4V this specification for batteries.

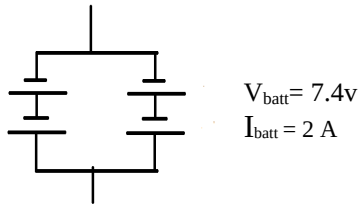

Fig.6. Battery Connection

6.6.STEP DOWN CONVERTER

Step down converter is an IC that works to decrease the input voltage from high to low. The ICs proposed in ISRASAT1 is LTC1148-3.3 and LTC1148-5 where is output voltage 5V, 3.3V respectively, where we needed two buses supply subsystem. The IC has efficiency of around 95% and uses external complementary MOSFT power switching frequency up to 250 kHz providing constant ripple current in inductor and has large rang input from 3.5V to 18V.

6.7.OVER-CURRENT PROTECTION

In an electric power system, over-current is present when larger electric current exists through a load higher than what it can endure. That causes excessive generation of heat, which leads to the risk of fire or damage to the load. Short circuits and excessive load can cause over-current. TPS20XD is used to protect subsystems from over-current. It can detect over-current occurrence and regulate the power if it continues for a short period. It also has a temperature sensor. If over current lasted until the temperature reaches a threshold, the IC cuts the power off from the subsystem, and returns it when the power returns to stability. IC also can switch power on and off through an enable pin. Thus, only subsystems functioning at a time are supplied with power. Hence, power is efficiently used. Fig. 7 shows the circuit diagram for the protection IC.

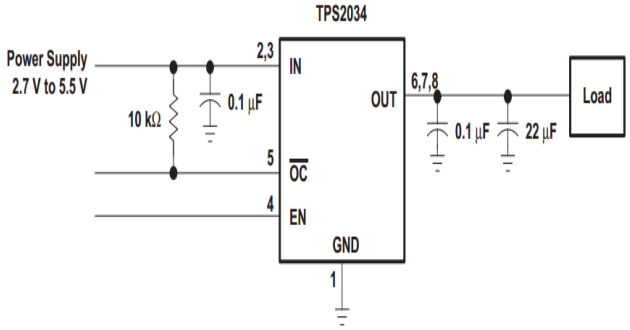

Fig.7. Circuit Diagram of the Protection IC

6.8.PRIORITY CONTROL

The EPS shall reset the whole Cubesat every few days in order to discharge the accumulated charges. A power switch is placed directly after the battery. It is logically turned ON and OFF. After the time specified ends, the switch is turned off for few seconds and then switched back on. Fig. 8 shows the flowchart for the process.

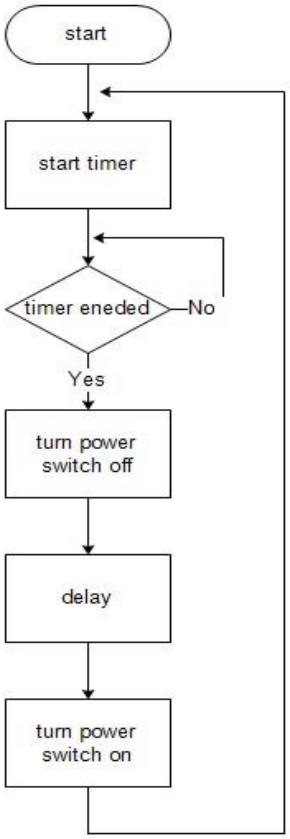

Fig.8. Reset Flowchart

7.CONCLUSION

In this paper, the authors highlighted the design and implementation of the electrical power system of ISRASAT1 CubeSat. The EPS is responsible to deliver power to other subsystems onboard of the satellite, receiving power from solar cells and storing it in batteries. The main tasks of the EPS research team is design the subsystem within the limitations and specifications stated in the main structure guides of a small satellite of limited size, weight and budget. The research methodology followed during this project was based upon estimation of the whole power consumption together with tolerance that is acceptable in voltage and current by each of those subsystems. Simulink simulations are used to visualize variation of voltage with current sink.

The next phase was to proceed with a system design that relied on applying ICs instead of discrete components wherever it is possible so as to assist in size and weight requirements, as well as compact system integration.

The design considered power consumption specifications shown in Table 1 as well as structure specifications shown in Table 2. After the physical implementation of the EPS, measurements were carried so as to compare practical results with theoretical values targeted by the design specifications. Fortunately, the results were comparable to the design requirement with acceptable errors that are less than 100 mW, in the worst case.

ACKNOWLEDGEMENT

The authors would like to show gratitude to the staff of the Institute of Space Research and Aerospace (ISRA) in Khartoum, and the research team of ISRASAT1 CubeSat in particular, for their everlasting help and support.

REFERENCES

[1] Mehrbarvar, Arash (February 20, 2014) "cubesat design specification". The cubesat program, Calpoly SLO.

[2] Justin M. Akagi, Power Generation and Distribution System Design for the Leonidas Cubesat Network, University of Hawai`i at Manoa, Honolulu, HI 96822.

[3] Ghislain Remy, Olivier Bethoux, Claude Marchand, Hussein Dogan "Review of MPPT Techniques for Photovoltaic Systems"; Université Pierre et Marie Curie P6; Université Paris-Sud 11; France.

[4] Craig S.Clark, An Advanced Electrical Power System For Cubesats, Pestana Conference Centre – Funchal, Madeira – Portugal, 31 May – 4 June 2010

[5] Abdulkadir, M., Samosir, A. S., Yatim, A. H. M. and Yusuf, S. T. (2013) "A new approach of modelling, simulation of mppt for photovoltaic system in simulink model", *Journal of Agricultural & Biological Science*, 8(7), pp-488.

[6] Saad Saoud, Lyes, Faycal Rahmoune, Victor Tourtchine, and Kamel Baddari (2013), "On the fuzzy modeling based estimation of maximum power generation from photovoltaic module", 3rd International Conference on Systems and Control.

[7] Skyttemyr, Knut Olav, Design and Implementation of the Electrical Power System for the CubeSTAR Satellite, https://www.duo.uio.no/handle/10852/37159.

~~*~*~*~*~*~*~*~*